Amlogic S905X3 □□□□□□□□□ Quad Core G31 MP2 □□□□□□ 4GB LPDDR4 32GB eMMC Android 9 □□□□□□□□□□□□□□□

□□□□□□□□□□□□□□□	
□□□□□□□□□□□□	□□□□□□□□□□ Amlogic S905X3
□□□□□□□	Amlogic S905X3 □□□□□□ ARM® Cortex™ A55 □□□□□□□□□□□□ 64 □□□
GPU	□□□□□□□□□□□ GPU G31™ MP2
□□□	LPDDR4: 2GB/4GB
eMMC	32GB(□□□□□□□□: 16GB/64GB)
□□□□□□□□□□□□□□□□	□□□□□□□□□□□□□□□□ Android 9.0
□□□□□□□□□□□□□□□□□□□□□□	IEEE 802.11 a/b/g/n/ac; 2.4G / 5G
□□□□□ □	□□□□; □□□□□□□□□□□□□□□□□□□□□
□□□□□□□□□□□□□□□□□□□□□□□□□□□□□□□□□□□□	
□□□□□□□	Ÿ Amlogic Video Engine (AVE) □□□□□□□□□□□□□□□□□□□□

□□□□□□□□	□□□□□□□□□□□□□□□□□□□□□□□□□□□□□□□□ □□□□□□□ Netflix □□□□ □□□□□□□□□□□□□, □□□□□□ □□□□ □□□□□□□□□□□□□□□□□□□□□□□□□□□□□□□□ Android Market, Amazon App Store □□□□ □□□□□□□□□□□□□□□□□□□□□□, □□□□□□□ HDD, U Disck, □□□□□□ TF

Accessories :

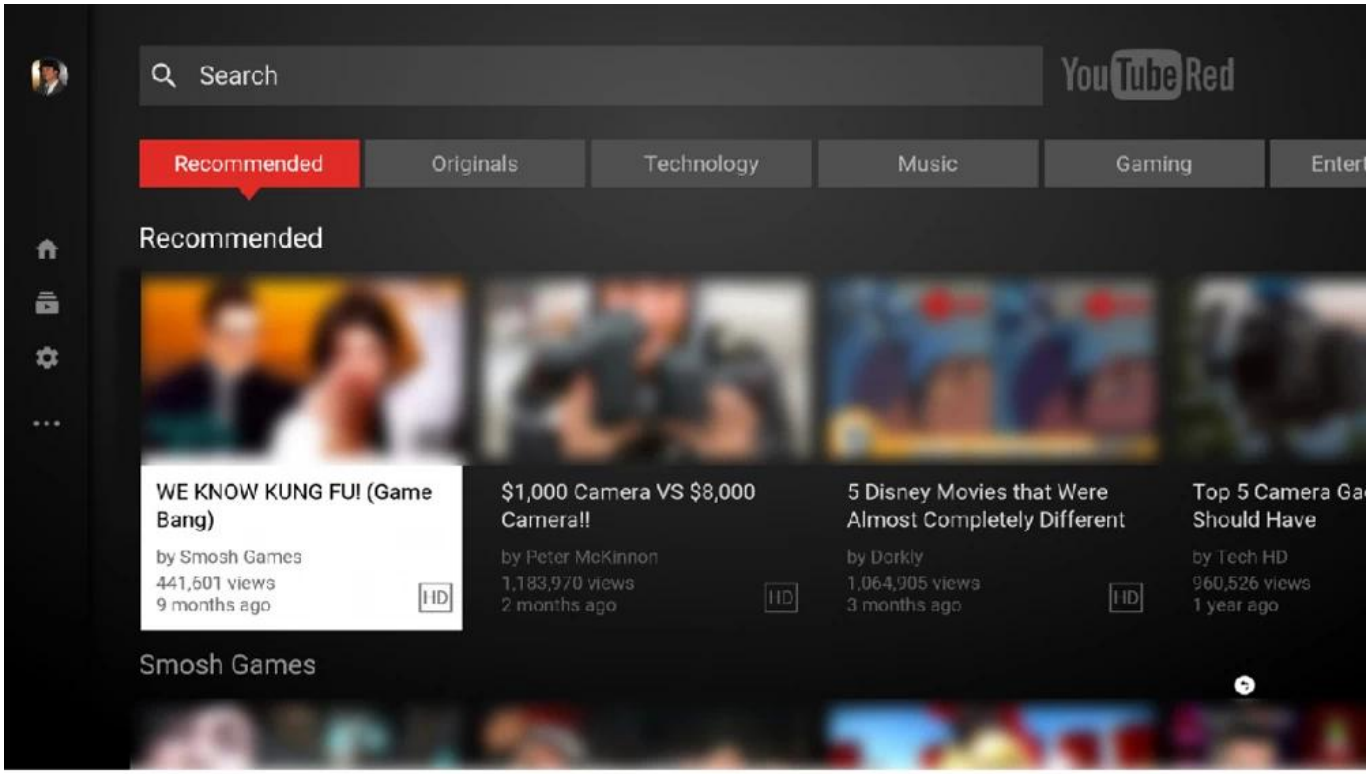
Search
YouTube Red
Recommended
Originals
Technology
Music
Gaming
Recommended
WE KNOW KUNG FU! (Game Bang)
by Smosh Games
441,601 views
9 months ago
HD
$1,000 Camera VS $8,000 Camera!!
by Peter McKinnon
1,183,970 views
2 months ago
HD
5 Disney Movies that Were Almost Completely Different
by Dorkly
1,064,905 views
3 months ago
HD
Top 5 Camera Ga
Should Have
by Tech HD
960,526 views
1 year ago
Smosh Games

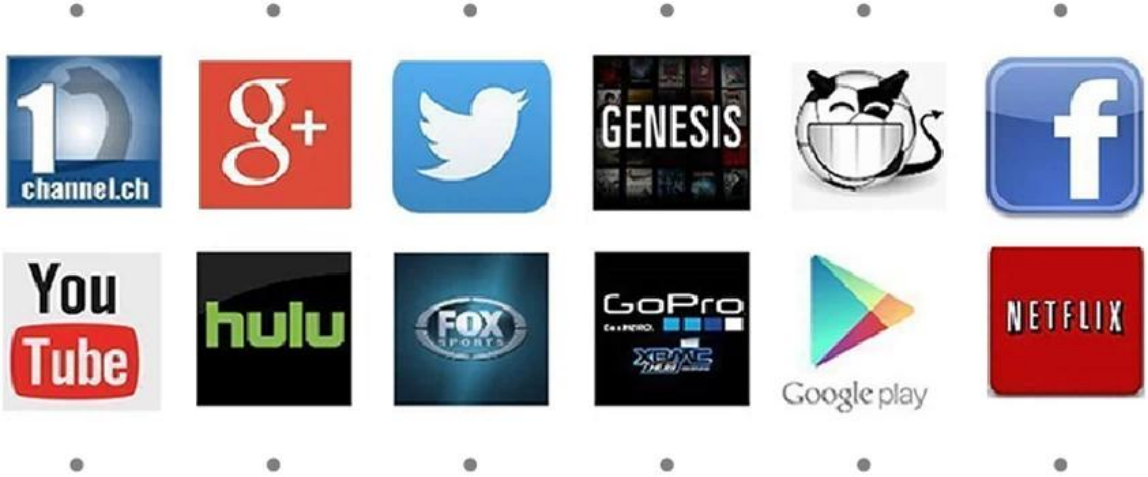
channel.ch
GENESIS
YouTube
hulu
FOX SPORTS
GoPro
Google play
NETFLIX

AirPlay
Enjoy it on the big screen and the bost speaker.

Mirecast

Your vidio/music/photo from your Android devices/ios devices through DLNA/Airplay/onto big screen. Enjoy the best gast best gaming& entertainment experience.

LCD Pannel : System Time Display / HD Video Output Status Display / AV Status Display / USB Mount Status Display / TF Card Mount Status Display

Support HDR+

HDR makes it´s possible than color gamut espands 100% and maximun

amlogic
S905X3

CPU
4 Core
64bit

Android
9.0

ARM
Cortex A55

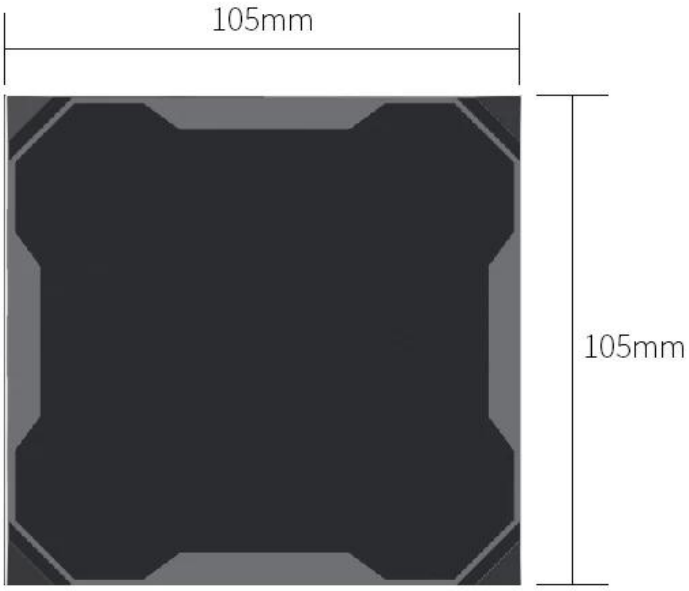

LAN
1000M

GPU
Mail-G31

H.265
HEVC

VP9
HDR 10+

WiFi
2.4/5.8G
802.11.ac

8K
Ultra HD

BT
4.0

eMMC
DDR3

□□□□□□□□□□□□□□□□□□□□□□□□□□□□□□□□□□□□□□ Amlogic S905X3 □□□□□□□□□□ □□

□□□□□□□□□□□□□□□□□□□□□□□□□□: □□□□□□□□□□ Amlogic S905X3 □□□□□□□□□□□□□□□□□□□□□□□□□□□□□ Quad-Core □□□ GPU G31 MP2 □□ □□□□□□□□□□□□□□□□□□□□□□□□□□□□□□□□□□□ □□□□□□□□ □□□□□□□□□□□□□□□□□□□□□□□□□□□□□□□□□□□□□□□ □□□

□□□□□□□□□□□□□□□□□□□□□□□□□□: □□□ 4K □□ G31 MP2 GPU □□ □□□□□□□□□□□ □□ □□□□□□□ Dolby Digital □□□ DTS □□□

□□□: □□□□□ LPDDR4 RAM □□□□ 4GB □□□□□□□□□□□□□□□□□□□□

eMMC □□□□ 32GB □□□□□□□□□ Amlogic S905X3 □□□□□□□□□