□□□□□□□□□□□□□□□□□□□ Android □□□□□□□□□□□□□□□ Cloud 4K

□□□□□□□□□□□□□□□□□	
□□□□□□□□□□□□□□	□□□□□□□□□□ T972 Cloud 4K □□□□□□□□□□□□□□ Android Media Player
□□□□□□□	Amlogic T972(T962X2) □□□□□□□□□□ ARM Cortex A55 1.98GHZ
□□□□□□□	Penta Core ARM Mail-450
□□□	DDR4 2GB/4GB (□□□□□□□□□□□)
□□□	16GB eMMC (□□□□□□□□□□□□□□□□□□□□□ 128GB □□□□ SD/USB)
□□□□□□□□□□□□□□□□□	□□□□□□□□□□□□□□□□□□ Android 9.0
□□□□□□□□□□□□□□□□□□□□□□□□□□□□□□□□□□□	
CODEC □□□□□□/□□□□□□	−Amlogic Video Engine (AVE-10) □□ 4Kx2K@75fps - □□□□□□□□□□□□□□□□□□□□□ / □□□□□□□ −□□□□□□□ VP9 2-10 □□□□□□ 8Kx4K@24fps □□□□ 4Kx2K@60fps −H.265 HEVC MP-10@L5.1 □□□□□□ 8Kx4K@24fps □□□□ 4Kx2K@60fps −□□□□□□□ AVS2-P2 □□□□□□ 4Kx2K@60fps −H.264 AVC HP@L5.1 □□□□□□ 4Kx2K@30fps −H.264 MVC □□□□□□ 1080P@60fps −MPEG-4 ASP@L5 □□□□□□ 1080P@60fps (ISO-14496) −WMV/VC-1 SP/MP/AP □□□□□□ 1080P@60fps −AVS-P16(AVS) /AVS-P2 □□□□□□□ JiZhun □□□□□□ 1080P@60fps −MPEG-2 MP/HL □□□□□□ 1080P@60fps (ISO-13818) −MPEG-1 MP/HL □□□□□□ 1080P@60fps (ISO-11172) −□□□□□□□□□□□□ 8/9/10 □□□□□□ 1080P@60fps − □□ −□□ MJPEG □□□ JPEG (ISO/IEC-10918) −□□□□□□□□□□□□□□□□□□□□□ JPEG □□□□□□□□□□□□□□□ □□□□□□□ □□□□□□□□□□□□□□□□□□□□□□□□□□□□□□□□□□□□□ −□□□□□□□□□□□□□□□□□□□□□ *.mkv,*.wmv,*.mpg, *.mpeg, *.dat, *.avi, *.mov, *.iso, *.mp4, *.rm □□□ *.jpg
□□□□□□□□□□□□□□□□□□□□□□□□/□□□ □□□	−□□□□□□□ VP9 2-10 □□□□□□ 8Kx4K@24fps □□□□ 4Kx2K@60fps −H.265 HEVC MP-10@L5.1 □□□□□□ 8Kx4K@24fps □□□□ 4Kx2K@60fps −□□□□□□□ AVS2-P2 □□□□□□ 4Kx2K@60fps −H.264 AVC HP@L5.1 □□□□□□ 4Kx2K@30fps −H.264 MVC □□□□□□ 1080P@60fps −MPEG-4 ASP@L5 □□□□□□ 1080P@60fps (ISO-14496) −WMV/VC-1 SP/MP/AP □□□□□□ 1080P@60fps −AVS-P16(AVS) /AVS-P2 □□□□□□□ JiZhun □□□□□□ 1080P@60fps −MPEG-2 MP/HL □□□□□□ 1080P@60fps (ISO-13818) −MPEG-1 MP/HL □□□□□□ 1080P@60fps (ISO-11172) −□□□□□□□□□□□□ 8/9/10 □□□□□□ 1080P@60fps − □□□ −□□ MJPEG □□□ JPEG (ISO/IEC-10918) −□□□□□□□□□□□□□□□□□□□□□ JPEG □□□□□□□□□□□□□□□ □□□□□□□ □□□□□□□□□□□□□□□□□□□□□□□□□□□□□□□□□□□□□ −□□□□□□□□□□□□□□□□□□□□□ *.mkv,*.wmv,*.mpg, *.mpeg, *.dat, *.avi, *.mov, *.iso, *.mp4, *.rm □□□ *.jpg
□□□□□□□□□□□□□□□□□□□□□□□□□□□□□□ □□□□□□/□□□□□□□□□	□□□□□□ MP3, AAC, WMA, RM, FLAC, Ogg, Dolby DTS Audio □□□□□□□□□□□□□□□□□□□□□□□□□□□□□□ □□□□□□□□□□□□□□□□□□□□□□□□□ 7.1/5.1 VAD □□ AEC □□□□□ □□□□□ TDM/PCM/I2S □□□□□ 3 □□□□□ □□□□□□□□□□□□ TDM/PCM □□□□□□ 384kHz x32□□□ x 8ch □□□□ 96kHzx 32□□□ x 32ch □□□□□□□□ I2S □□□□□□ 384kHz x 32□□□ x 8ch □□□□□□□□□□□□□□□□□□□□□□□□□□□□□□□□□□□□ PDM □□□□□ CIC, LPF □□□ HPF □□□□□□□□□□□□□□□□□□□□□□□□ □□□ □□□ DMIC □□□□□□ 8 □□□□□□ □□□□□□□□□□□□□□□□□□□□□□□□□□□□□□□□□□□□ SPDIF/IEC958 □□□□□ □□□□□□□□□□□□□□□□□□□□□□□□□ L/R 2 □□□□ □□□□□□□□□□□□□□□□□□□□□ L/R 2 □□□□ □□ I2S PCM □□□□□□ Audio EQ/DRC □□□□□□□□□□□□□□□□□□□□□□□□□
□□□□□□□□□□□□□□□□□□□□□□	HD MPEG1/2/4, H.265/HEVC, HD AVC/VC-1, RM/RMVB, Xvid/DivX3/4/5/6, RealVideo8/9/10
□□□□□□□□□□□□□□	Avi/Rm/Rmvb/Ts/Vob/Mkv/Mov/ISO/wmv/asf/flv/dat/mpg/mpeg
□□□□□□□□□□□□□□	MP3/WMA/AAC/WAV/OGG/DDP/TrueHD/HD/FLAC/□□□
□□□□□□□□□□□□□□□□□	HD JPEG/BMP/GIF/PNG/TIFF
□□□□□□□	

□□□□□□□□□□□□	1*3.5 □□.□□□□□□□□□□
□□□□□□□□□□□□□□□□	1 * LVDS 40pin 2.0 □□. □□□□□□□□□□□□□□□□□□□□□□□□□□□□ 8bit / 10bit 1 * V-By-one □□□□□□□□□□□□□□□□□□□□□□□□□□□□□□□□
□□□□□□□□□□□□□□	HDMI*3
□□□□□□□□□□□□□□□	4□□□ 2.5□□. 10W8Ω@2
□□□□□□□□□□□□□□□□	*1 10M/100M RJ45 2.4G WIFIBT (□□□□□□□□□ WiFi 2.4G/5G □□□□□□□□□□□□)
□□□□□ USB2.0	□□□□□ PCIE(4)x1 USB OTG * 1 (□□□□□□□□□□□□□□□□□□) □□□□□ USB*4
□□□□□□□□□□□□□□□□□□□□□□	*2, 6□□□ 2.0□□
□□□□□□□□□□□□□□□□□□□□□□□□	*1, 7pin 2.0 □□. □□□□□□□□□□□□□□□□□□ LED (□□□□□□□□□□□□□)
□□□□□□□□□□	□□□□□□□□□□□□□*4
□□□□□□□□□□□□□□□□□ TF	*1
□□□□□□□□□□□□□□□□□□	*1
□□□□	
□□□□□□□□□□□□□□□□□□	STB, 5VSB, 5V, 12□□□ 2.00□□ □□□□□□ 12V / 4pin 2.54 □□. 12V / 2.5DC

ONENUTS

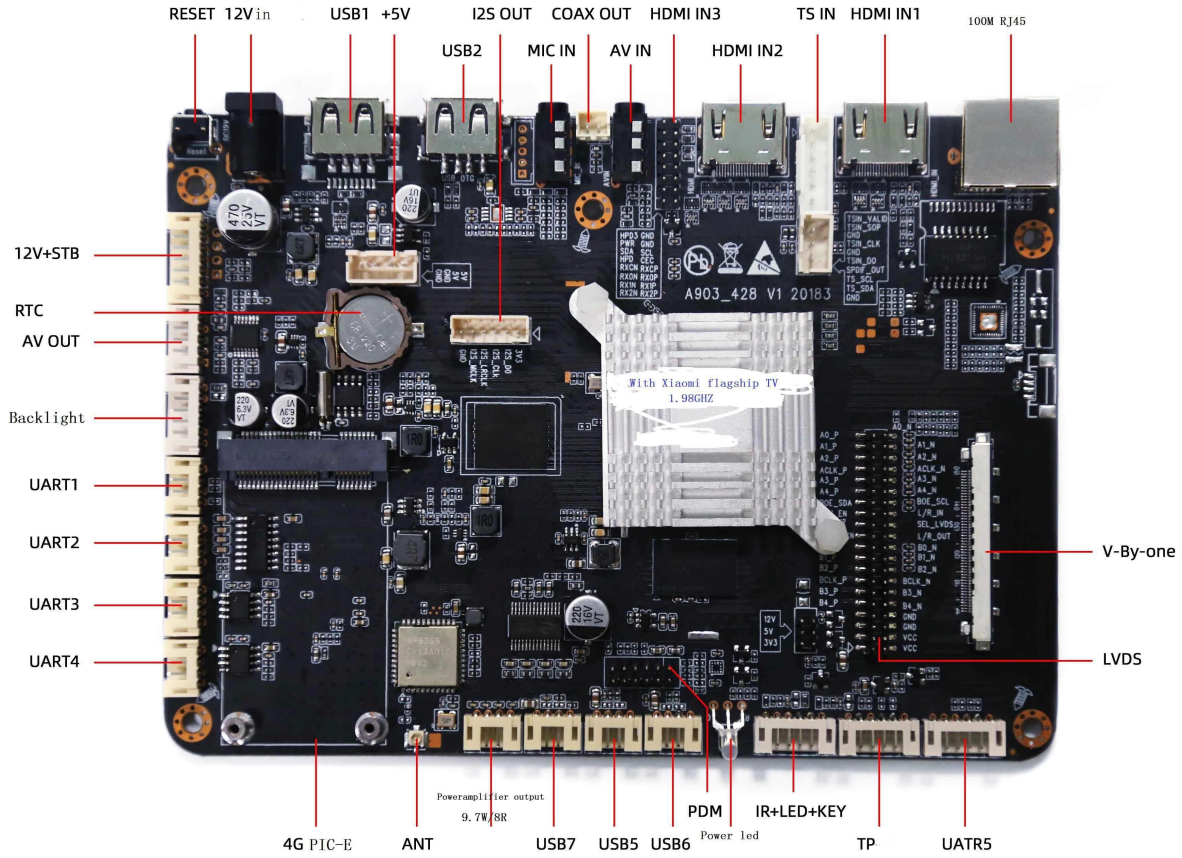

ONENUTS

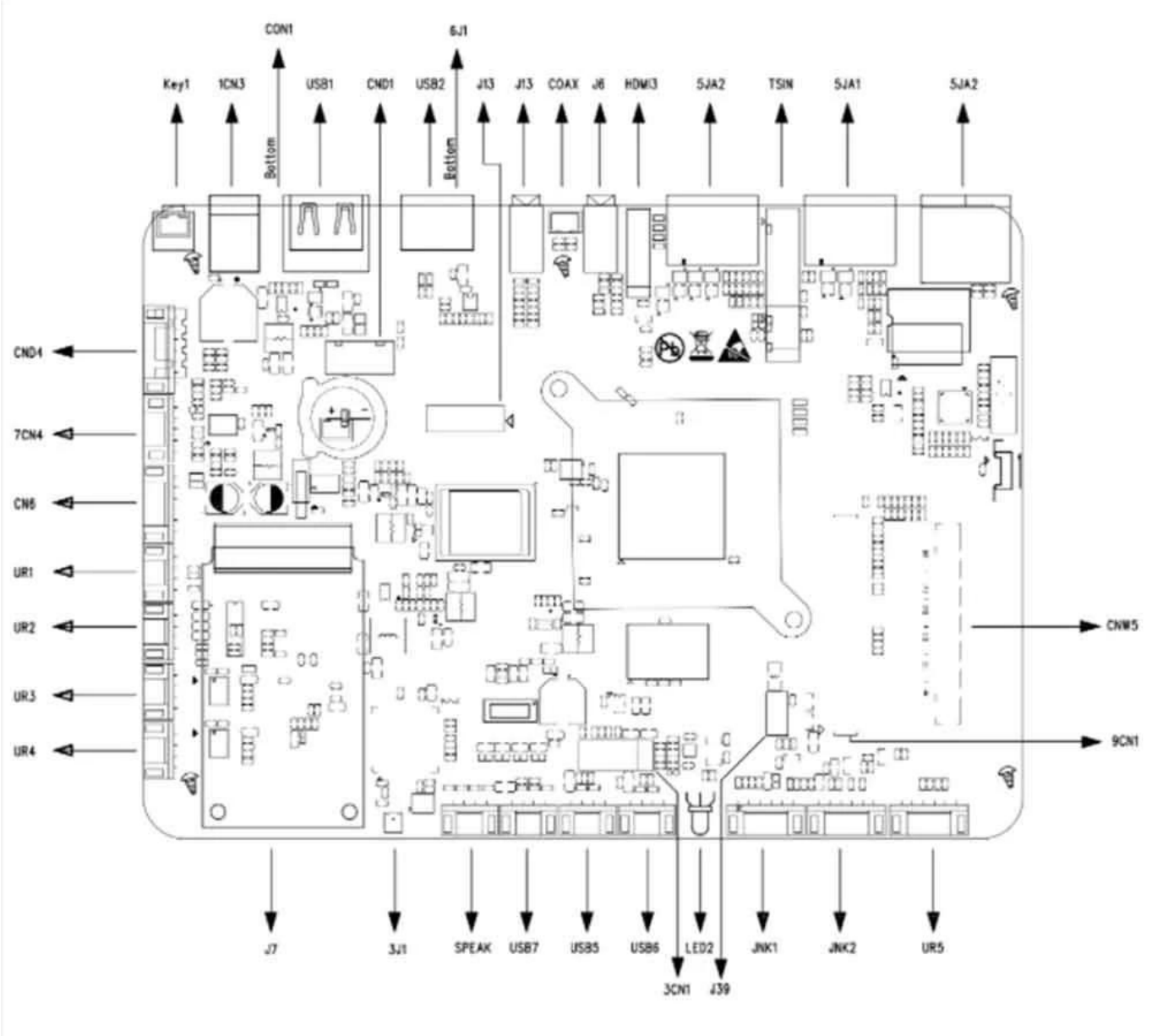
CON1
6J1
Key1
1CN3
USB1
CND1
USB2
J13
J13
COAX
J6
HDMI3
5JA2
TSIN
5JA1
5JA2
Bottom
Bottom
CND4
7CN4
CN6
UR1
UR2
UR3
UR4
CNW5
9CN1
J7
3J1
SPEAK
USB7
USB5
USB6
LED2
JNK1
JNK2
UR5
3CN1
J39

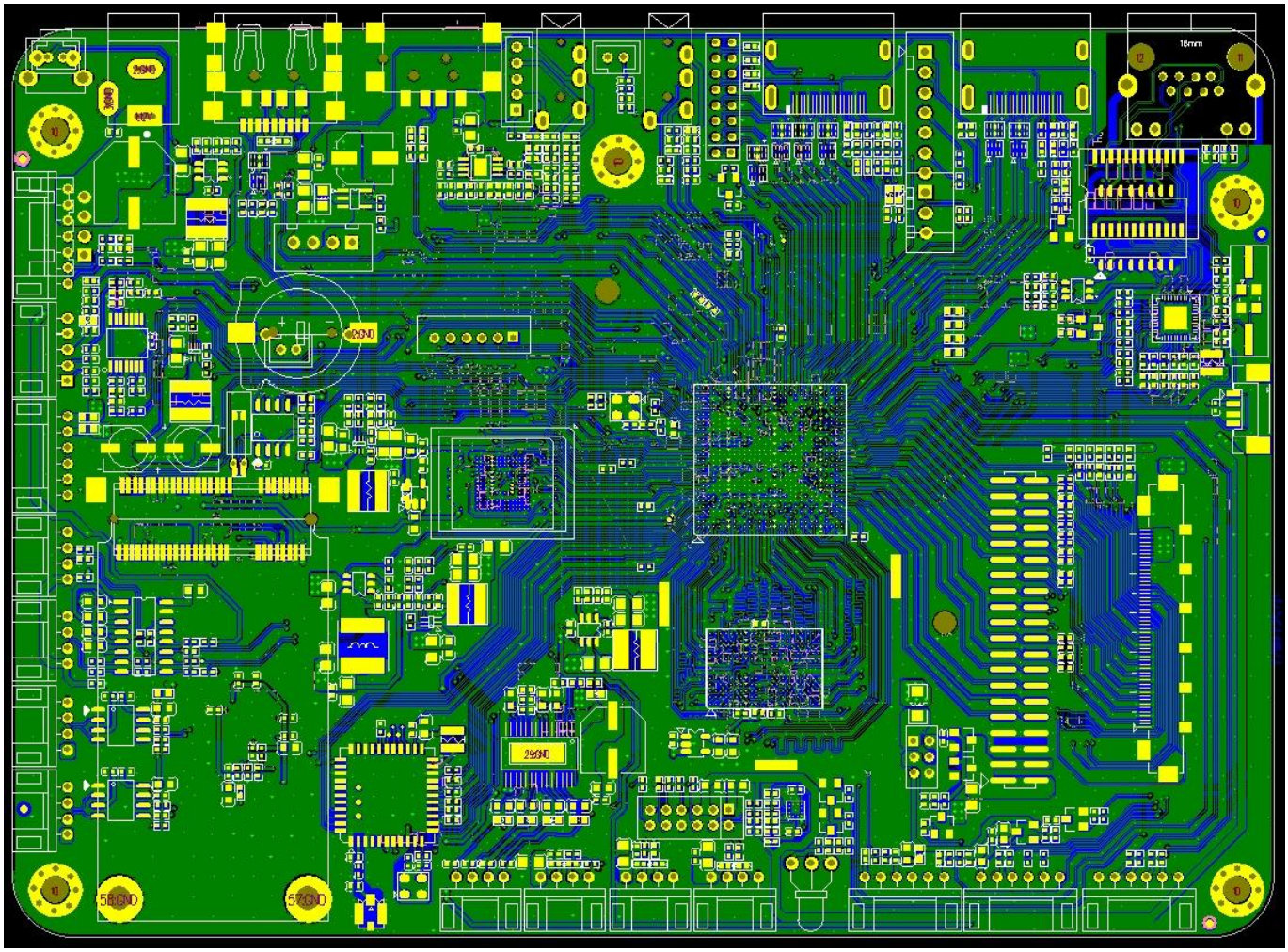

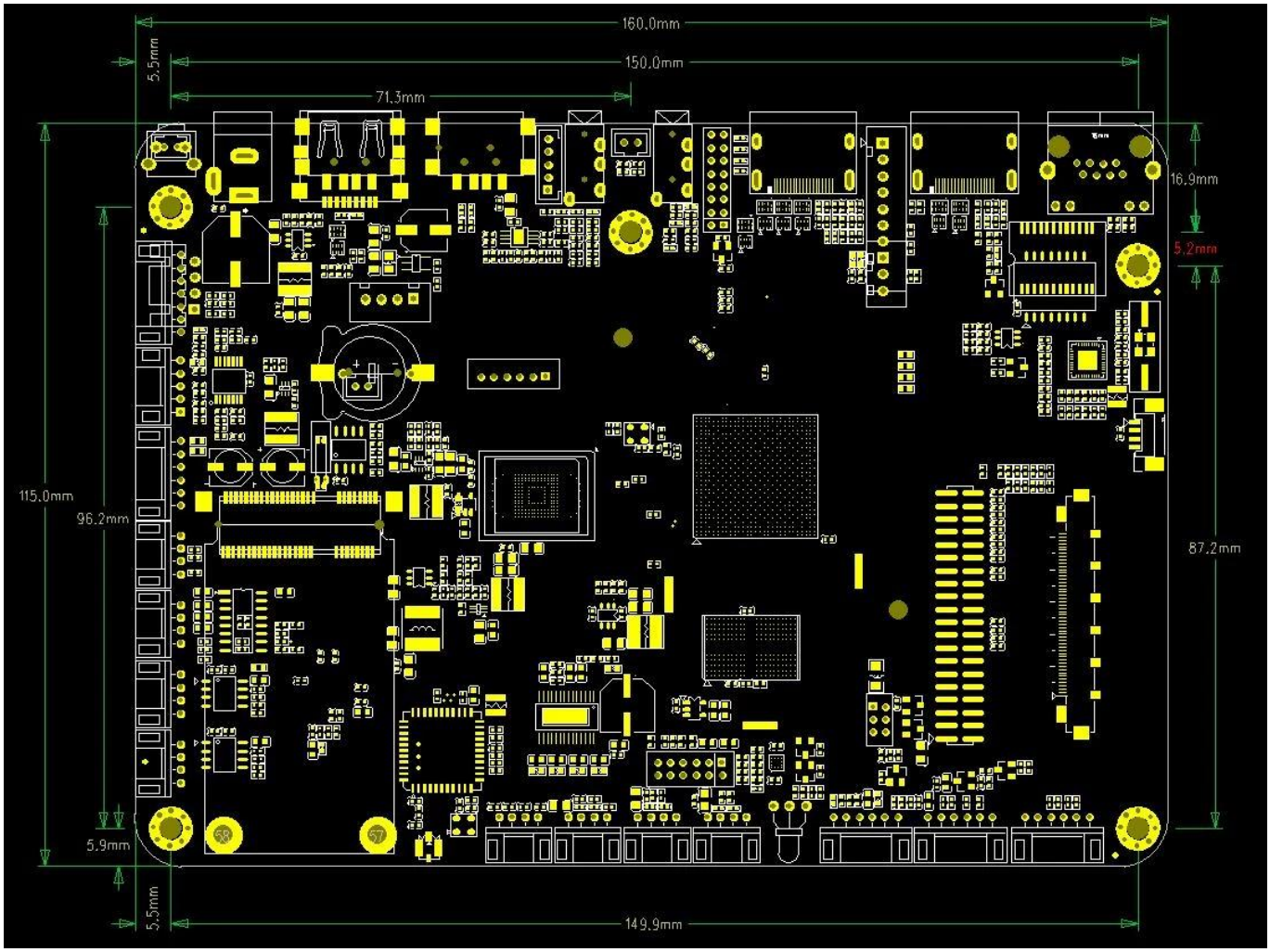
160.0mm
150.0mm
71.3mm
5.5mm
16.9mm
5.2mm
115.0mm
96.2mm
87.2mm
5.9mm
5.5mm
149.9mm

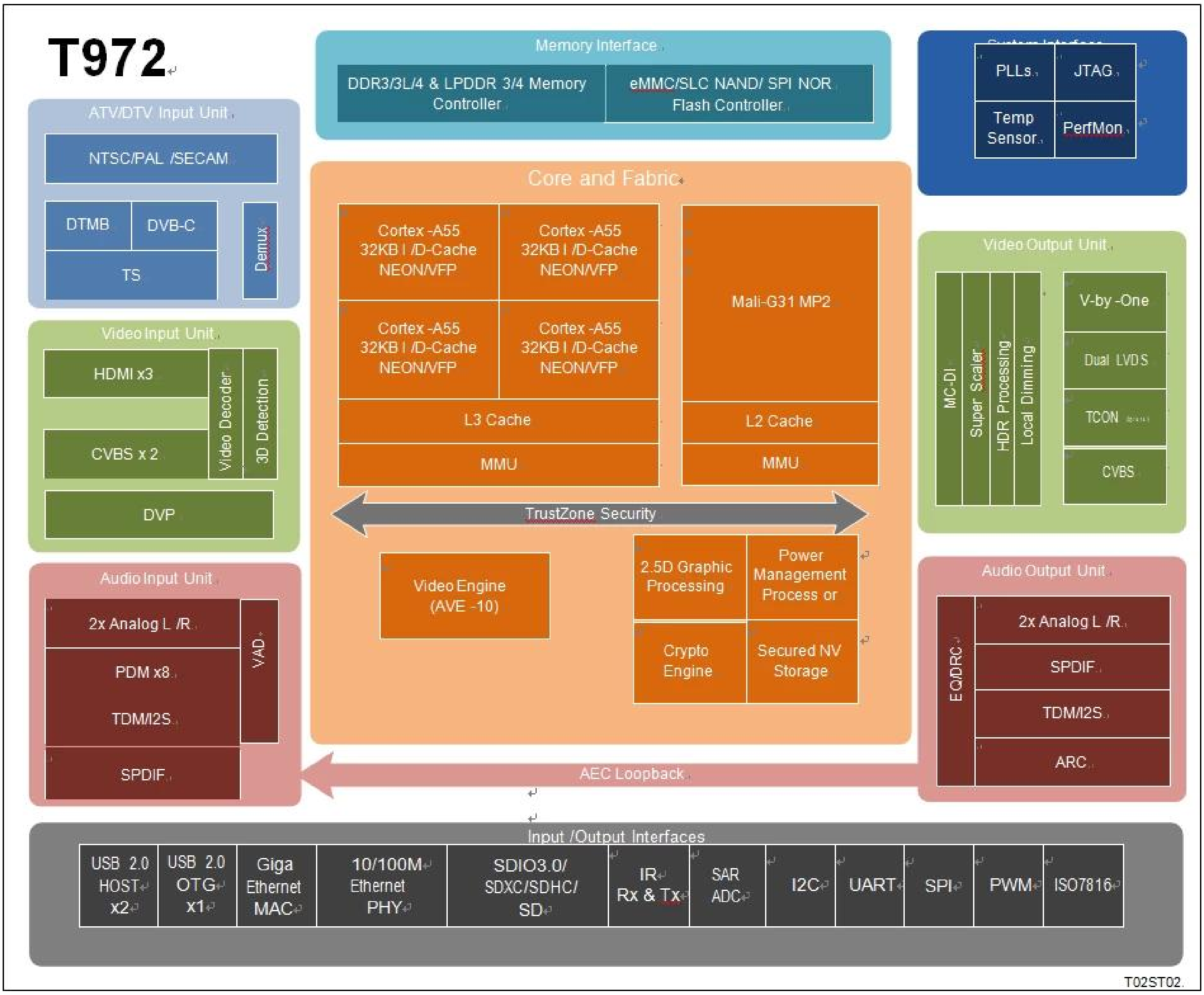

Amlogic T972 □□□ UHD TV □□□□□□□ □□□□□□□□□□□□□□□□□ CPU/GPU □□□□□□□□□□, □□□□□□□□□□□□□□□□□□□□□□□ HDR □□□□□□□□□□□□□□□□□□□□□□□□□□, □□□□□□□ CODEC □□□□□□ 8K/4K □□□□□□□□□□ □□ CPU □□□□□□□□□□ CPU ARM Cortex-A55 □□□ quad-core □□□□□□□□ L3 □□□ □□□□□□□□ CPU Cortex-A55 □□□□□□□□□□□□□□□□□□□ NEON SIMD □□ □□□/□□□□□□□□□□□□□□□□□ □ GPU ARM Mali-G31 MP2 □□□□□□□□□□□□□□□□□□□ OpenGL ES 3.2, Vulkan 1.1 □□□ OpenCL 2.0 □□□□□□□ □□□□□□□□□□□□□□□□□□□□□□□□□ 2.5D □□□□□□□□□□□□□□□□□□□□□□□□ □□□□□ □□□□□□□ □□□□□□□□□□□□□□□□□□□□□□□□□□□ CPU □□□ GPU □□□□□□□□□□□□□□□□□□□□□□□□□□□□ □□□□□□□□□ □□□□□□□□□□□□□□□□ □□□□□□□□□□□□□□□□□□□□□□□□□□□□□□□□

Amlogic Video Engine (AVE-10)

□□□ CPU Cortex-A55 □□□□□□□□□□□□ CODEC □□□□□□□□□□□□ AVE-10 □□□□□□□□□□□□□□□□□□□□□□□□□□□□□□□□ 4K2K □□□□□ Trusted Video Path (TVP) □□□□□□□□□□□□□□□□ DRM □□□□□□□□□□□ □□□□□□□□□□□□□□□□□□□□□□□□□□□□□□□□□□□ □□□□□□ MVC, MPEG-1/2/4, VC-1/WMV, AVS , AVS2, RealVideo, MJPEG, H.264, H265-10, VP9-10 □□□ JPEG □□□□□□□□□□□□□□□□□□□□/□□□□□□□□□□□□□□□□□□□□□□□□□ HDR10, HDR10, HLG □□□ Technicolor Prime HDR, □□□□□□□□□□ BT.2020/ BT.2100, □□□,

[illegible], [illegible]
[illegible]
[illegible] LVDS [illegible] V-by-one [illegible]
8 [illegible] UHD/FHD [illegible] P2P [illegible] 12
[illegible] UHD [illegible] TCON [illegible]
CEDS, CHPI, CMPI [illegible] iSP.
[illegible] HDMI 2.1 [illegible] 3 [illegible] CVBS [illegible]
2 [illegible] HDMI [illegible] HDCP 1.4/2.2 [illegible] HDR [illegible] 4K2K
Amlogic T972 [illegible] ATV [illegible]
[illegible] NTSC, PAL [illegible] SECAM [illegible] DTV [illegible]
DTMB [illegible] (TS) demux
[illegible]
[illegible]/[illegible] DVB Common Descrambler
1.0 [illegible] DES, Triple DES (TDES/3DES) [illegible] AES [illegible] ISO7816
[illegible]
Amlogic T972 [illegible] CPU
[illegible]
[illegible] Voice Activity Detection (VAD)
[illegible]
[illegible] MIC [illegible] PDM, TDM [illegible] I2S [illegible] 8 [illegible]
Amlogic T972 SoC [illegible]
10/100/1000M Ethernet MAC [illegible] RGMII, 10/100M Ethernet PHY, [illegible] USB 2.0 [illegible],
[illegible] SDIO 3.0, [illegible] eMMC 5.0, [illegible] SLC NAND [illegible] SDIO [illegible]
/[illegible] SD, UART, I2C, SPI PWM [illegible] IR Blaster [illegible]
[illegible] QoS
[illegible]
[illegible] DRAM
[illegible] SecureOS, Linux [illegible] GNU/GCC Android tool chain
[illegible] AMLOGIC [illegible]

[illegible]
[illegible] ARM Cortex-A55 [illegible]
[illegible] ARMv8.2 [illegible]
[illegible] L3 [illegible]
[illegible] TrustZone
[illegible] QoS [illegible]
[illegible] CoreSight

[illegible] 3 [illegible]
[illegible] ARM Mali-G31 MP2
[illegible] 4 [illegible], [illegible], [illegible] 2x 4 [illegible] (EE)
[illegible]
[illegible] OpenGL ES 3.2, Vulkan 1.1 [illegible] OpenCL 2.0

[illegible] 2.5D
[illegible] bitblt [illegible]
[illegible] (ROP)
[illegible]
[illegible] 4:2:0, 4:2:2 [illegible] 4:4:4 [illegible]
([illegible] 8/16/24/32 [illegible])

[illegible]
[illegible]

[illegible]
[illegible] AES [illegible] 128/256 [illegible] 16 [illegible] ECB, CBC [illegible] CTR
[illegible] DES/3DES [illegible] ECB [illegible] CBC [illegible] 64 [illegible] DES [illegible] 192 [illegible] 3DES
[illegible] DVB-CSA [illegible]
[illegible] (TRNG) [illegible] SHA-1/SHA-2

CODEC [illegible]/[illegible]
Amlogic Video Engine (AVE-10) [illegible] 4Kx2K@75fps [illegible]/[illegible]
[illegible] VP9 2-10 [illegible] 8Kx4K@24fps [illegible] 4Kx2K@60fps
H.265 HEVC MP-10@L5.1 [illegible] 8Kx4K@24fps [illegible] 4Kx2K@60fps
[illegible] AVS2-P2 [illegible] 4Kx2K@60fps
H.264 AVC HP@L5.1 [illegible] 4Kx2K@30fps
H.264 MVC [illegible] 1080P@60fps
MPEG-4 ASP@L5 [illegible] 1080P@60fps (ISO-14496)
WMV/VC-1 SP/MP/AP [illegible] 1080P@60fps
AVS-P16(AVS) /AVS-P2 [illegible] JiZhun [illegible] 1080P@60fps
MPEG-2 MP/HL [illegible] 1080P@60fps (ISO-13818)
MPEG-1 MP/HL [illegible] 1080P@60fps (ISO-11172)
RealVideo 8/9/10 [illegible] 1080P@60fps
[illegible]
MJPEG [illegible] JPEG [illegible] (ISO/IEC-10918)
[illegible] JPEG [illegible]
[illegible] *.mkv,*.wmv,*.mpg, *.mpeg, *.dat, *.avi, *.mov, *.iso, *.mp4, *.rm [illegible] *.jpg

[illegible] Amlogic TruLife [illegible] 9
[illegible] HDR10/10, HLG, Technicolor Prime HDR
[illegible] 3D [illegible]
[illegible], [illegible], [illegible], [illegible]
[illegible]
[illegible]
3:2/2:2 [illegible] (VOF)
[illegible] SuperScaler [illegible], [illegible], LTI, CTI, [illegible], [illegible]
[illegible]
3D LUT [illegible] 17x17x17 [illegible] 4913 [illegible]
[illegible]
[illegible] HSL [illegible]
[illegible]/[illegible]/[illegible]/[illegible]
[illegible]
[illegible]: [illegible] 2 [illegible] 2 [illegible]
[illegible] HDR [illegible]
[illegible]

[illegible] LCD

□□□□□□□□□ V-By-One 8 □□□□□□□□□□□□□□□□ 1, 2, 4 □□□□□□□□ □□□□□□□□□□□□□□□□□□□□ 4Kx2K 60Hz
□□□□□□□□□ LVDS □□□ 1920x1080 60Hz
□□□□□□□□□ mini-LVDS □□□□□□ (1 □□□□□□ 6 □□□□)/(2 □□□□□□ 3 □□□□) □□□□□□□□□□□□□□□□□□□□□ HD/FHD
□□□□□□□□□□□□□□□□□□□□ □□□□□□□□□□□□□□□□□□□□□□□□□□□□□□□□ 1920x1080Hz
□□□□□□□□□ CEDS/CHPI/CMPI/iSP 12 □□□□□□□□□□□□□□□□□□□□□□□□□ UHD □□□□□□□□□□□□□□□□□□□□□
□□□□□□□□□□□□□□□□□□□□ UHD □□□□□□□□□ TCON □□□□□□□□□□□□□□□□□□□□□ 4Kx2K 60Hz
□□□□□□□□□□□□□□□□□□□ 3 □□□□□□□□□□□□□□□□□□□□□□□□□□□□□ LCD
□□□□□□ Dithering □□ LCD □□□□□□□□□□□□□□□□□

□□□□□□□□□□□□□□□□□□□□□□/□□□□□□□□□□□□□□□□□□□□

3x □□□□□□□□□□□□□□□ HDMI 2.1 □□□□□□ Dynamic HDR, ARC, HDCP 1.4 /2.2, □□□□□□□□□□□□□□□□□□□□□□□□□□□□□□
4Kx2K@60
2x CVBS 480i/576i □□□□□□□□□□□□□□□□□□□□□□□□□□□□
□□□□□□□□□□□□□□□□□□□□□□□□□ CVBS (PAL/NTSC)
ITU 601/656 □□□□□□□□□□□□□□□□□□ RGB565 8 □□□□, CCIR656, CCIR601, YUV422, YCbCr422

□□□□□□□□□□□□□□□□□□□□□□□□□□□□□□□□□□□□□□/□□□□□□□□□□□

□□□□□□□ MP3, AAC, WMA, RM, FLAC, Ogg, Dolby DTS Audio
□□□ 7.1/5.1
VAD □□□□□□□□□□□□□□□□□□□□□□□□□□□□□□□□□□□□ AEC □□□□□□
□□□□□□ TDM/PCM/I2S □□□□□□ 3 □□□□□□ □□□□□□□□□□□□ TDM/PCM □□□□□□□ 384kHz x32□□□□ x 8ch □□□□□
96kHzx 32□□□ x 32ch □□□□□□□□ I2S □□□□□□□ 384kHz x 32□□□ x 8ch
□□□□□□□□□□□□□□□□□□□□□□□□□□□□□□□□□□□ PDM □□□□□□ CIC, LPF □□□ HPF □□□□□□□□□□□□□□□□□□□□□ □□□□□□□ DMIC
□□□□□□□ 8 □□□□□□□
□□□□□□□□□□□□□□□□□□□□□□□□□□□□□□□□□□□□ SPDIF/IEC958 □□□□□□
□□□□□□□□□□□□□□□□□□□□ L/R 2 □□□□□ □□□□□□□□□□□□□□□□□□ L/R 2 □□□□□
□□ I2S PCM
□□□□□□□ Audio EQ/DRC □□□□□□□□□□□□□□□□□□□□□

□□□□□□□□□□□□□□□□□□□□□□□□□□□□□□□□

□□□□□□□□□□□□□□□□□□□ NTSC, NTSC-J, PAL-BG, PAL-DK1, PAL-I, PAL-DK, PAL-M, PAL-N, SE- CAM-DK2, SECAM-DK3, SECAM-L ATV □□□□□□□□□□□□□□□□□
□□□□□□□□□□□□□□□□□□□□□□□□□□□□□□□□□□□□□□□: BTSC, A2, EIA-J □□□ NICAM
□□□□□□□□□□□□□□□□□□, □□□□□□□□□□□□□□□□□□, V-chip
□□□□□□□□□□□□□□□□□□□□□□□□□□ DTMB/DVB-C/ DTV
Build-in VIF demodulator □□□□□□□□□□□□□□□□□□□□□ IF □□□□□□□□□□□□□□□□□□□□□□□□□□

□□□□□□□□□□□□□□□□□□□□□□□□□□□□ **DTV**

3x □□□□□□□□□□□□□□□□□□□□ Transport stream (TS) □□□□□□□□□□□□□□□□□□□□□ demux
□□/□□□
□□□□□□□□□□□□ PWM, I2C □□□ SPI □□
□□□□□□□□□□□□□□□□□□□□□□□□□□ ISO 7816 □□□□□□

□□□

□□□□□□□□□□□□□□□□□□□□□□□□□□□□ DRAM 32 □□ 4GB
□□□□□□□□□□□□□□□□□□□□□□□□□□□ JEDEC DDR3-2133 /DDR3L-2133 /DDR4-2666 /LPDDR3-2133 /LPDDR4-3200 SDRAM
□□□□□□ SDSC/SDHC/SDXC □□□□□□□□□□□□□□□□□□□□ SDIO □□□□□□□□□□□□□□□□□□□□□□□□□□□□□□□□□□□□ 1 □□□□□□□ 4 □□□□
□□□ 2.x/3.x/4.x □□□□□ DS/HS □□□□□□□ UHS-I SDR104
□□□□□□□□□□□□□□□□□□□□□□□□□□□□□□□□ eMMC □□□□□□□□□□□□□□□□□□□□□□□□□□□□□□□□□□□ 1/4/8 □□□□
□□ 5.0 HS400 □□□□□□□□□□□□□□□□□

[illegible] SLC NAND
[illegible] OTP 4K [illegible]

[illegible]
IEEE 802.3 10/100/1000M [illegible] MAC [illegible] RGMII
[illegible] PHY [illegible] 10/100M
[illegible] WiFi/IEEE802.11 [illegible] USB [illegible] SDIO
[illegible] Bluetooth [illegible] USB [illegible] UART
[illegible] WIFI [illegible] BT [illegible]

[illegible] **I/O** [illegible]
USB I/O [illegible] USB 2.0 [illegible], [illegible] USB [illegible] USB OTG [illegible]
UART [illegible], I2C [illegible] PWMs [illegible] SPI
[illegible] IR-blaster
SAR ADC 10 [illegible] 4 [illegible]
IO [illegible]
[illegible]
[illegible] DMA [illegible]
[illegible] 24 MHz
[illegible] ICE/JTAG

[illegible]
[illegible]
[illegible] CPU, [illegible], DRAM [illegible]
PLL [illegible]
[illegible] I/O [illegible] 1.8V [illegible] 3.3V

[illegible]
[illegible] (TEE) [illegible] Trustzone
[illegible], OTP [illegible], DRAM
[illegible], [illegible]
[illegible]
[illegible]/[illegible] RNG [illegible]
[illegible]/[illegible]
Trusted Video Path (TVP) [illegible] ([illegible] SecureOS)
IO [illegible]

[illegible]
FCBGA, 19 [illegible]. x 19 [illegible]., [illegible] 0.65 [illegible], [illegible] RoHS

[illegible]
[illegible]
[illegible] Cloud 4K Digital Signage Android Media Player
[illegible]
[illegible]

[illegible] 4K [illegible]
[illegible] Full HD [illegible]
[illegible] 4K [illegible]

[illegible]

[illegible] Cloud 4K Digital Signage Android Media Player
[illegible]

[illegible]

[illegible] Android Cloud 4K Digital Signage
[illegible] HDMI, USB [illegible]

[illegible]

[illegible] Cloud 4K Digital Signage Android Media Player
[illegible] 4K [illegible] Cloud 4K Digital Signage Android Media Player [illegible]